Functional Performance of Coir Geotextile Reinforced Rural Roads

Bindhu B.H. , SheelaEvangeline Y.,Mariamma Joseph & Sayida M.K.,
Department of Civil Engineering, College of Engineering Trivandrum.

Abstract— **Subgrade stabilization is the largest single application for geotextiles by volume. In unpaved road construction, geosynthetic reinforcement has been applied to improve their overall strength and service life. The stabilization of pavements on soft ground with geotextiles or geogrid is primarily attributed to the basic functions of separation of base course layer from the subgrade soil, reinforcement of the composite system etc. But these products are non-biodegradable and cause environmental problems. Coir geotextiles which is a natural geotextile are manufactured from coir fibres are abundantly available in our state of Kerala. If coir can be proved to be an alternate material for soil stabilization, coir industry will find a new area of application. This study is intended to bring out the effectiveness of natural coir geotextile as reinforcement in rural roads. Coir geotextile was placed as reinforcement at depth in the sub base and base course.**

The performances of coir geotextile reinforced pavements were studied using merlin test, skid resistance test and visual evaluation. A comparison is made between reinforced and unreinforced roads in this paper.

I.INTRODUCTION

India is one of the country having largest road networks in the world. However many of the existing roads are becoming structurally inadequate because of the rapid growth in traffic volume and axle loadings. Stabilizing paved and unpaved roads with fabrics offers one of the methods for improvement. If it can reduce the thickness of the various road layers or extend pavement service life and simultaneously make both cost and performance effective. For the development of rural roads, Indian Government aimed at providing the quality road connectivity to rural population through road network and to boost the rural economy.

One of the major problems of rural roads is that, most of the unpaved roads are built in weak subgrade even through the traffic intensity is low in rural roads. Geosynthetic materials have been used to stabilize soils in road construction and have proved in several cases to be successful. The geotextiles used are mainly polymeric materials. They perform the functions as reinforcement, separation and drainage. To avoid all such inherent problem of rural roads, it can be reinforced by laying geosynthetics in between subgrade and subbase/base course. It is an easier and quicker solutions compared to traditional alternatives which are solutions detrimental to the environment. Through the use of geosynthetics in roads works well, however it may not be available option when it comes to rural places.

Geosynthetic materials have been used to stabilize soils in road construction and have proved in several cases to be successful. The geotextiles used are mainly polymeric materials. They perform the functions as reinforcement and drainage.

This polymeric geotextile material can be replaced by natural materials such as coir. Coir geotextiles manufactured from coir fibres which are abundantly available in our state of Kerala. If others can be proved to be an alternate material for soil stabilization, coir industry will find a new area of application. This paper reports details the performance of coir geotextile reinforced pavement on soft soil in three road stretches of Karikuzhi – Chekidampara and Attukal School Junction – Pampadi Road in Trivandrum district and Kumbarivila - Kollantemukku in Kollam district.

II. LITERATURE REVIEW

The transportation infrastructure is clearly related to the economical development of a country. The rural roads, most of them are unpaved roads are the major form of Indian road network. The major problems faced by this roads are, they are built in weak subgrade and sub base/base-coarse. Major function of geotextile materials includes filtration, separation and reinforcement. The geotextile behave as a tensioned membrane serves to reduce the vertical stress acting on the subgrade (Giroud and Noiray,1981). The placement position of reinforcement is a main factor affecting the bearing capacity of reinforced granular soil and higher bearing capacity has been observed when the depth of placement of reinforcement is decreased (Sankariah and Narahari, 1988) . The reinforcement can also yield to reductions of pavement thickness between 20% and 50% with obvious favorable economical repercussions. Benefits of reducing base course thickness are realized if the cost of the geosynthetics is less than the cost of the reduced base coarse material (Anderson and Killeavy, 1989). In developing countries like India, cost

and availability of geosynthetics are the major constraining factors for the construction of pavement.

A typical reinforced unpaved road consists of layer of fill compacted into the subgrade with a single layer of geosynthetic reinforcement (geogrid or geotextile) places at the base of the fill (Miligan et.al, 1989). It is also concluded that the use of geosynthetic reinforcement is particularly effective when the subgrade is weak. It is well known that the natural materials will decompose over time, which limits its use to short term applications only. Since an unpaved road on soft subgrade gets stabilized by soil consolidation due to passage of vehicles, till the time, natural geotextiles supports it. It is expected that consolidation of the soft subgrade soil will make reinforcement unnecessary in the long term (Fannin and Sigurdsson, 1996). The presence of the reinforcement layer increases lateral restraint or passive resistance of the fill material, increasing the rigidity of the system and reducing the vertical and lateral pavement deformation (Ajitha and Jayadeep, 1977; Canceli and Montanelli,1999; Perkins, 1999 a & b; Som and Sahu, 1999). Reinforcement placed high up in the granular layer hinders lateral movement of the aggregate due to frictional interaction and interlocking between the fill material and the reinforcement which raises the apparent load-spreading ability of the aggregate and reduces the necessary fill thickness (Perkins, 1999).

Natural geotextiles like coir and jute are gaining importance because of their Eco friendliness and low cost with reasonable durability. There are several studies conducted on the application of different materials for improving the bearing capacity of weak soil. Geotextile and their related products have many civil engineering applications in India. The paper also highlights the uses of geotextiles made of natural fibers and material in India. Coir is the husk of coconut, a common waste material where coconuts are grown and subsequently processed. Coir fiber is strong and degrades slowly compared to other natural fibers due to high organic content. The degradation of coir is found to retain 80% of its tensile strength after 6 months of embedment in clay (Rao and Balan, 2000). Benefits of reducing base course thickness are realized if the cost of the geosynthetics is less than the cost of the reduced base course material. In developing countries like India, cost and availability of geosynthetics are the major constraining factors for the construction of reinforced soil structures. High cost of geosynthetics and stringent environmental protection requirement make it important to explore alternative natural products to make the constructions cost efficient and eco-friendly (Sarsby, 2007; Rawal and Anandjiwala, 2007) It is reported increased bearing capacity when woven and non-woven coir geotextiles were used at the interface of silty clay subgrade and granular base course of 150mm thickness. It has been found that the membrane effect of reinforcement diminishes with an increase in the thickness of the road aggregate layer (Babu et. al, 2008). The aggregate thickness can be considerably reduced by using geotextile and the percentage reduction depends on the quality of geotextiles, property of soil and the placement depth of the reinforcement. (Chauhan et. al, 2008).

Coir geotextile develops good interface friction with granular fill which can induce tensile stress in the reinforcement when embedded within the fill material. Such minor changes in horizontal stress distribution can cause significant changes in system performance. Hence, when used as reinforcement in unpaved roads, laying of coir geotextile must be carried out so as to take full advantage of this biodegradable material during the early period of construction when much of the working of membrane action cannot be expected (Subaida et. al, 2009). The presence of the reinforcement layer also increased markedly the load spreading angle compared to unreinforced one (Ennio and Luiz 2010). The studies shows that the inclusion of coir geotextile as reinforcement in soil improves the California Bearing ‘ratio of lateritic soil (Vinod and Minu, 2009; Senthil and Pandiammal, 2011).

Evaluation of pavements are done visually for alligator cracking, block cracking, transverse cracking, joint reflection etc. described in table 1. Allowable IRI values for different types of pavements as per Sayers et al., 1986 are presented in fig.1.

TABLE 1. DETAILS OF VISUAL EVALUATION

Sl. No.	Distress type	Identification and problems
1	Alligator cracking	Series of interconnected cracks caused by fatigue failure of the surface repeated traffic loading
2	Block cracking	Interconnected rectangular cracks
3	Transverse cracking	Cracks occur in perpendicular to the pavement’s centerline or lay down direction. It allows moisture infiltration.
4	Joint Reflection Cracking	Cracks in a flexible overlay of a rigid pavement. Allows moisture infiltration
5	Patching	An area of pavement that has been replaced with new material to repair the existing pavement.
6	Potholes	Small, bowl shaped depressions in the pavement surface. It causes serious vehicular damage and moisture infiltration.

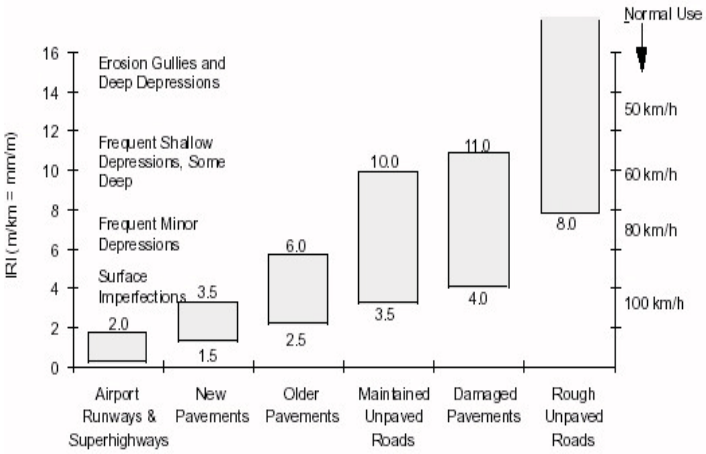

Fig.1 IRI roughness scale (Replotted from Sayers et al., 1986)

Skid resistance is the frictional force developed at the tyre pavement interface when tyres are being prevented from

rotating along the pavement surface. Adequate skidding resistance is essential for safe operation of vehicles from the point of acceleration, deceleration, cornering and abrupt stoppings. Functional performance/quality of any pavement is affected in two ways. Reduction in surface evenness (roughness), Reduction in skid resistance of the pavement with the passage of time and traffic (dependent on climatic and environmental factors) As per IRC:SP:83–2008, values between 45 to 55 indicates satisfactory surface in favorable weather and vehicle condition. Value of 55 or greater indicates generally acceptable skid resistance in all conditions. Value of 65 and above indicates good to excellent skid resistance in all conditions.

III. COIR GEOTEXTILE REINFORCED ROAD

Three road stretches reinforced with coir geotextiles were selected for the study. The roads are, 150 m road in Attukal – Pampadi road and 470 m Karikuzhy- Chekidampara road in Nedumangad Block and 100m stretch at Chirakkad – Kumbakad road in Varkala Block. Soil properties of all the three roads are presented in table 2. Attukal-Pampadi road is designated as Road 1, Karikuzhy- Chekidampara road is Road 2, Chirakkad – Kumbakad road Road 3. Road 1 and 2 were constructed during 2011, Road 3 during 2008. Properties of coir mat are presented in table 3.

TABLE 2. CHARACTERISTICS OF SOIL

Properties	*Road1*	*Road2*	*Road3*
Liquid limit	41.70%	25.2%	31.2%
Plastic limit	25.25%	18.03%	22.19%
Optimum moisture content	13.154%	17.621%	16.22%
Maximum dry density	1.939 g/cc	1.746 g/cc	1.84 g/cc
CBR (unsoaked)	5.85%	3.34%	3.47%
CBR (soaked)	1.76%	2.84%	1.25%

GT-1 is used in Road 3 and GT-2 is Road 1 and Road 2 and the properties of coir geotextile used are presented in Table 3.

TABLE 3. PROPERTIES OF COIR GEOTEXTILE

Properties of coir geotextile	*GT – 1*	*GT - 2*
Mass/Unit area	365 g/m^2	681 g/m^2
Thickness at 2 kPa	7.03 mm	7.2 mm
Tensile strength MD	5.06 kN/m	10.6 kN/m
Tensile strength CMD	2.27 kN/m	7.5 kN/m

Schematic diagram showing the position of coir geotextile is shown in fig.2. Photographs of roads during construction are shown in fig. 3 and 4. Laying of GSB layer is shown in fig.5

A. Construction of reinforced road

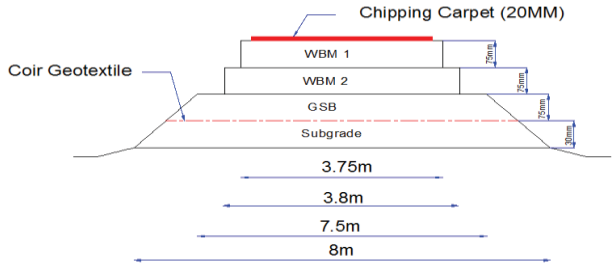

Fig.2 Schematic diagram of the cross section

Fig.3 Levelling of road before laying coir geotextiles

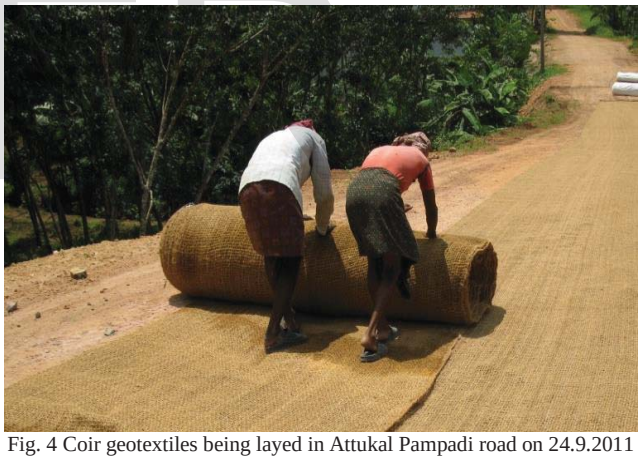

Fig. 4 Coir geotextiles being layed in Attukal Pampadi road on 24.9.2011

Fig.5 Laying GSB layer over coir geotextiles in Attukal Pambadi road

IV. EVALUATION OF FUNCTIONAL PERFORMANCE

A. *Visual and Roughness study*

Visual examination was done for Alligator cracking, Block cracking Transverse cracking Joint Reflection Cracking Patching Potholes. Then roughness measurements were made at regular intervals by using Machine for Evaluating Roughness using Low-cost Instrumentation (Merlin). The Merline has two feet, 1.8 meters apart, which rest on the road surface along the wheel track whose roughness is to be measured. Schematic sketch of merline is shown in fig.6. A moveable probe is placed on the road surface mid-way between the two feet and the Merlin measures the vertical distance, y, between the road surface under the probe and the Centre point of an imaginary line joining the bottom of the two feet. The result is recorded on a chart mounted on the machine. By taking repeated measurements along the wheel track, a histogram of values of y can be built up on the chart. The width of this histogram can be used to estimate road roughness on the IRI scale. The equation was derived over the range of IRI values. The undulations in a road's surface consist of a mixture of surface waves of different wavelengths. The sensitivity of the IRI scale varies with wavelength and it is highest for waves around two meters. The sensitivity of the Merlin is also high at these wavelengths and that is why it gives a good estimate of IRI. However, at other wave lengths there are differences, the Merlin being more sensitive than the IRI to short waves and less sensitive to long waves. Because of the different wavelength sensitivities, it is important to calibrate the bump integrator on a range of test sections whose surfaces are typical of the surfaces which the bump integrator is going to measure. British Pendulum Tester is shown in fig.6. Some hand-laid surfaces have a much higher proportion of long waves and so they have a different relationship between IRI and D. Where IRI is the roughness in terms of the International Roughness Index and D is measured from the Merlin chart (in mm).

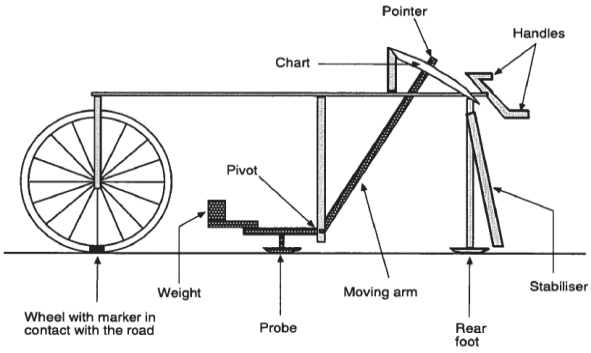

Fig.6 Skematic sketch of Merline

When the 200 measurements have been made, the chart is removed from the Merlin and turned on its side.

IRI is calculated by the equation

$$IRI = 0.593 + 0.0471\ D$$

B. *Skid resistance*

Skid resistance found out using British Portable Skid Resistance Tester (Portable Pendulum Tester). This apparatus gives the frictional resistance between a rubber slider (mounted on the end of a pendulum arm) and the road surface. figure of British Portable Skid Resistance Tester is shown in fig.7

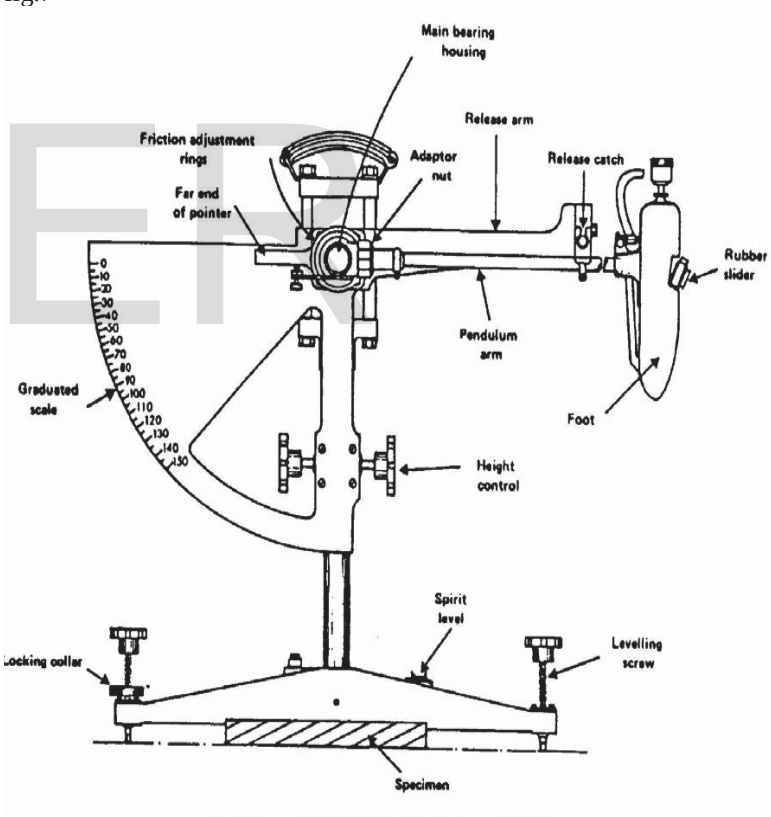

Fig.7 British Portable Skid Resistance Tester

V. RESULTS AND ANALYSIS

A. Visual Evaluation

Visual examination of three roads reinforced with coir geotextile presented in table 4 and without reinforcement are presented in table 5.

TABLE 4. VISUAL EXAMINATION RESULT OF WITHOUT COIR REINFORCED ROAD

Sl. No.	Without coir geotextile			
	Distress type	Road 1	Road 2	Road3
1	Alligator cracking	X	X	X
2	Block cracking	√	√	√
3	Transverse cracking	√	√	√
4	Joint Reflection Cracking	√	√	√
5	Patching	√	√	√
6	Potholes	X	X	√

X represents No distress road and √ Distress road

TABLE 5. VISUAL EXAMINATION RESULT OF COIR WITH REINFORCED ROAD

Sl. No.	With coir geotextile			
	Distress type	Road 1	Road 2	Road3
1	Alligator cracking	√	X	X
2	Block cracking	X	X	√
3	Transverse cracking	X	X	X
4	Joint Reflection Cracking	X	X	X
5	Patching	X	X	X
6	Potholes	X	X	X

X represents No distress road and √ with distress road

B. *Merline Test Result*

IRI value found out using Merline test apparatus on three roads reinforced with and without geotextile are presented in table 6 and 7.

TABLE 6. MERLINE TEST RESULT OF WITHOUT COIR GEOTEXTILE ROAD

Name of road	IRI Value and date of measurement			
	18.10.2012	11.08.2013	12.12.2013	12.4.2014
Road1	8.36	6.23	6.53	7.47
Road 2	9.11	7.63	5.73	6.60
Road3	-	6.602	6.60	6.70

TABLE 7. MERLINE TEST RESULT OF WITH COIR GEOTEXTILE ROAD

Name of road	IRI Value and date of measurement			
	18.10.2012	11.08.2013	12.12.2013	12.4.2014
Road 1	6.97	6.69	5.89	5.29
Road 2	6.24	6.08	5.98	5.73
Road 3	-	5.75	5.37	5.10

International Roughness Index of older pavement should between 2.5 to 6.0m/km as per Sayers et al., 1986. Roughness Index values of reinforced roads are slightly high at early stage but it reduces as time passes compared to unreinforced one. All roads are within the permissible limits

C. *Skid Resistance Result*

Skid resistance values are presented in table 8. Skid resistance values of reinforced roads are higher than unreinforced one. There is no large variation for skid resistance between reinforced and unreinforced roads. Skid resistance of all the roads under acceptable zone as per IRC:SP:83–2008. Road no 1 has CBR value 5.83 and other roads have 3.34 and 3.47. The road having comparatively high CBR value has low skid resistance

TABLE 8. SKID RESISTANCE VALUES FOR DIFFERENT ROADS

Name of road	Skid resistance Value	
	Without coir geotextile	With coir geotextile
Road 1	55.52	55.91
Road 2	90.94	94.79
Road 3	100.6	107.82

VI. CONCLUSION

Coir reinforced roads have less distress compared to unreinforced roads. Roughness Index values of reinforced roads are slightly high at early stage but it reduces as time passes compared to unreinforced one. There is no large variation for skid resistance between reinforced and unreinforced roads

Acknowledgement

Coir board Kochi is duly acknowledged for sponsoring this work.

References

[1] Cancelli, A., Montanelli,'F., 1999. In ground test for geosynthetic reinforced flexible paved roads, Proceedings of Geosynthetics '99, Vol2, Boston, USA, pp.863-879.

[2] Chauhan, M..S., Mittal,S., Mohanty,B., 2008. Performance evaluation of silty sand subgrade reinforced with fly ash qnd fibre. Geotextile and Geomembranes 26(5), 429-435.

[3] Ennio, M.P., luiz, G.S., 2010. Large scale tests on geosynthetic reinforced unpaved roads subjected to surface maintenance. Geotextiles and Geomembranes 28 (2010) 547-558.

[4] Vinod, P., Minu, M., 2009, California Bearing Ratio of Coir Geotextile Reinforced Subgrade. Proceedings of 10th National Conference on Technological Trends (NCTT09) 6-7 Nov 2009.

[5] Giroud, J., NoirayL., 1981. Geotextile reinforced unpaved road design. ASCE Journal of Geotechnical Engineering, Vol.107, 1233-1254.

[6] Rao, G.V.,Balan, K (Eds.), 2000. Coir Geotextiles-Emerging Trends. The Kerala State Coir Corporation Ltd (Publishers).

[7] Miligan, G.W.E., Jewell,R.A., Houlsby, G.T.,Burd, H.J., 1989.A new approach to design of unpaved roads, Part I. Ground engineering 22 (3), 25-29.

[8] Marcelo Bustos, Tomas Echaveguren, Hernan de Solminihac& Andres Caroca (2006) "Development of correlation equations between different measurements of skid resistance in pavements" 13(2006) 117-122

[9] Suleiman Arafat Yero, MohdRosliHainin&HaryatiYacoob (2012) "The Correlation between texture Depth, Pendulum Test Value and Roughness index of various Asphalt Surfaces in Malaysia" IJRRAS 13(1) (2012).

[10] David R Smith, JIPEA World Congress 2000, "Recent Skid Resistance Evaluations of concrete block paving in North America"

[11] Department of Transportation Minnesota Mn Road "Texture – British Pendulum" 1-June 2009.

[12] Main roads Western Australia, "Pavement Skid Resistance British Pendulum method"13 January 2012.

[13] Research & Development on September 1989, "Guidance Notes on Road Testing" Highway department.

[14] Cundill, "The merlin low-cost road roughness measuring machine" TRRl Research Report.

[15] www.dot.state.mn.us/mn road

[16] Ajitha B., Jayadeep, T., 1997 "Interfacial frictional properties of geotextile and biomas" Proceedings of Indian Geotechnical Conference, Vadodara, India Vol1. Pp 287-290.

[17] Anderson, P, Killeavy, M 1989, "Geotextiles and geogrds-cost effective alternate materials for pavement design and construction' In Geosynthetics'89, San Diego. USA, vol 2, 353-364.

[18] Babu, K.K, Beena, K.S, Raji, A.K., 2008 "Design of Coir Geotextile reinforced Road usinf IRC method". Highway Research Journal, Special Issue.

[19] Subaida, E.A., chandrasekaran, S., Sankar, N., 2008 "Experimental Investigstiond on tensile and pullout behaviour of woven coir geotextiles". Geotextiles and Geomembrane 27. Pp 204-210.

[20] Som, N., Sahu, R.B., 1999, Bearing capacity of a geotextile-reinforced unpaved road as a function of deformation- a model study, Geosyntetics International 6 (1), 1-17.